Space system for monitoring the gravitational field of the Earth "Gravisat"

S. Matviienko
Ph.D., S.R.
Chief designer DO
Private Joint Stock Company
“Research and production complex“Kurs”
Private Joint Stock Company “RPC “Kurs”
Str. Boryspilska, 9, Kyiv, 02099, Ukraine
E-mail: matvienko_2005@ukr.net

Microsat “Gravisat”spacecraft

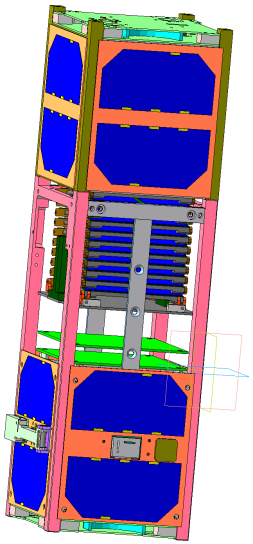

УКРАЇНА

ПАТЕНТ

НА КОРИСНУ МОДЕЛЬ

№ 124059

КОСМІЧНИЙ АПАРАТ

Видано відповідно до Закону України "Про охорону прав на винаходи і корисні моделі".

Зареєстровано в Державному реєстрі патентів України на корисні моделі 26.03.2018.

Заступник міністра економічного розвитку і торгівлі України М.І. Титарчук

Developers:
PrJSC “RPC “KURS”, STUU Igor Sikorsky KPI
Purpose:
Scientific experiments, communication,
Earth space exploration

Main technical parameters:

Mass

Payload – 1…3 kg

Total weight – 2…5 kg

Overall dimensions

in a folded position - 300×100×100 (mm)

in the working position – 1000×100×100(mm)

Power consumption

payload - 10 ... 15 Watts

base platform - 1 ... 2 watts

Orientation system

gravitational, electromagnetic

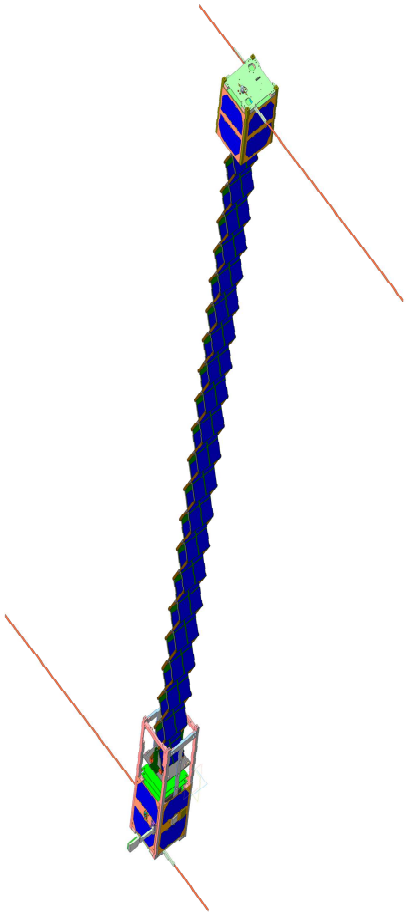

Patent application № 124059 Ukraine. IPC B 64G 1/00. / Spacecraft/S.A. Matviienko, (Ukraine); - Declared. 26.03.18

DRPG LAYOUT

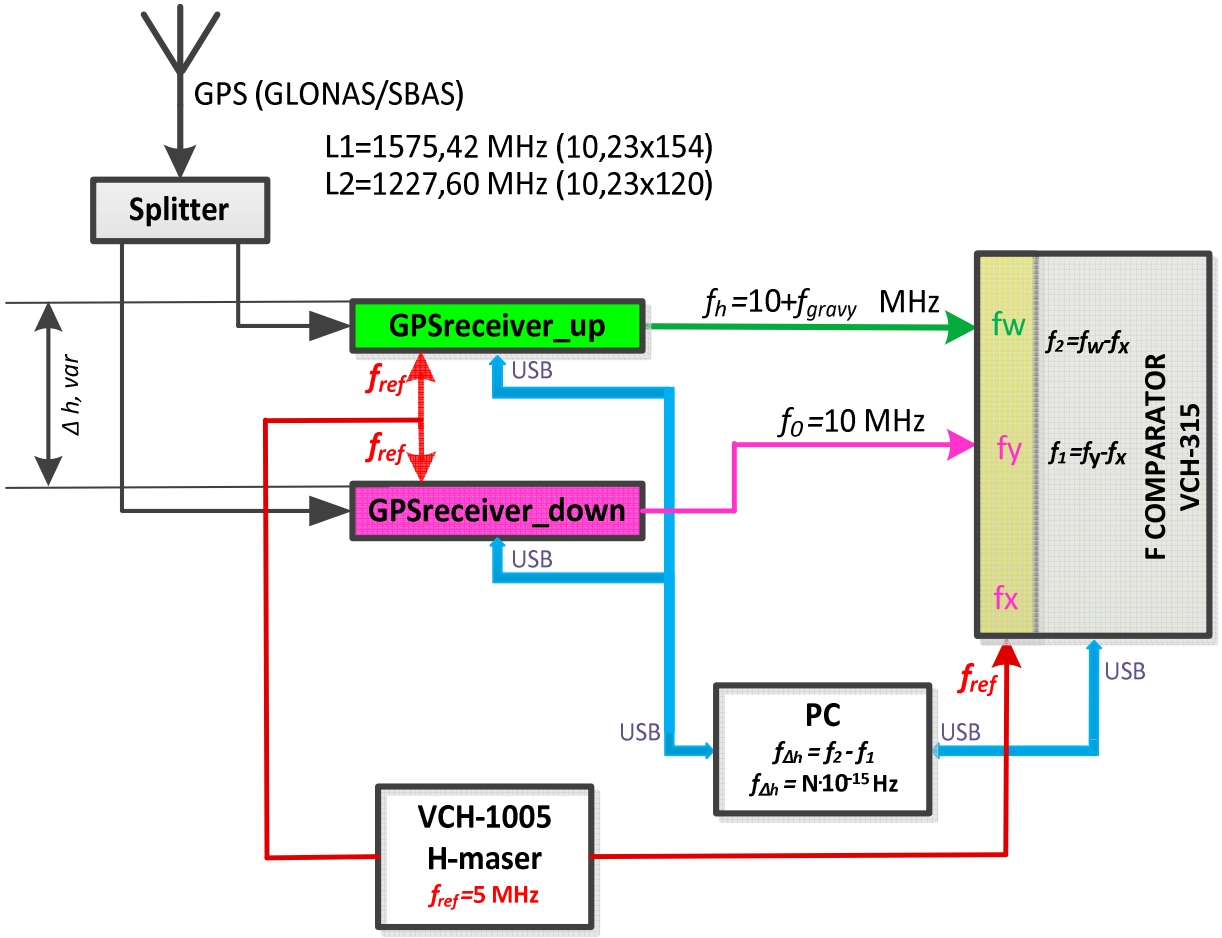

- *Matviienko S.A., Certificate of registration of copyright for work No. 42468 / Radiophysical method for measuring the parameters of the Earth's gravitational field / S.A. Matviienko, (Ukraine) - Declared 24.02.2012. (thesis for the degree of Ph.D.)*
- *Patent №90961, Ukraine. IPC G 01 V 7/00./ Radiophysical gravimeter / A.P. Matviienko, S.A. Matviienko, A.V. Meleshko (Ukraine); - Declared. 24.12.08; publ. 10.06.10; Bul. № 11*
- *Patent № 98358. Ukraine;- IPC G 01 V 7/14./ Method for measuring geodetic parameters and device for its implementation/ S.A. Matviienko, V.M. Romanko, O.V. Romanko (Ukraine); - Declared. 03.06.10; publ. 10/05/12; Bul. No. 9*

- **The profile of the company**
- Private Joint Stock Company “Scientific and Production Complex KURS” *(http://www.kurs.kiev.ua/eng/)* was founded in 1998 in accordance with the order of State Property Fund of Ukraine by restructuring and privatisation of state-owned enterprise *“RDC KURS”* which emerged from the Design Bureau of the former industry association of *“Radio Plant”.*
- Since 1998 till 2008 the company focused on the engineering services, based on rendezvous and docking sensors installation and services under well known brand “KURS”. Particularly, specific devices were designed and installed on ATV spacecraft as a part of its rendezvous and docking systems.
- During the last decade “KURS” was involved in the design and development of instrumentation used in space rockets and Interorbital facilities for transportation and docking in space and started to use GNSS sensors for orientation in space. The company is an important player in the implementation of the National Space programme of Ukraine.
- In 2015 *JSC “KURS”* developed a prototype which uses GNSS technology for gravity measurements.
- Besides above mentioned, *JSC “KURS”* is offering broad spectrum of geodesy services, like :
- Search and survey of underground utilities;
- Geodesic support of construction and operation of facilities;
- Inspection of building and premises technical conditions;
- Engineering and geodesic surveys;
- Topographic mapping;
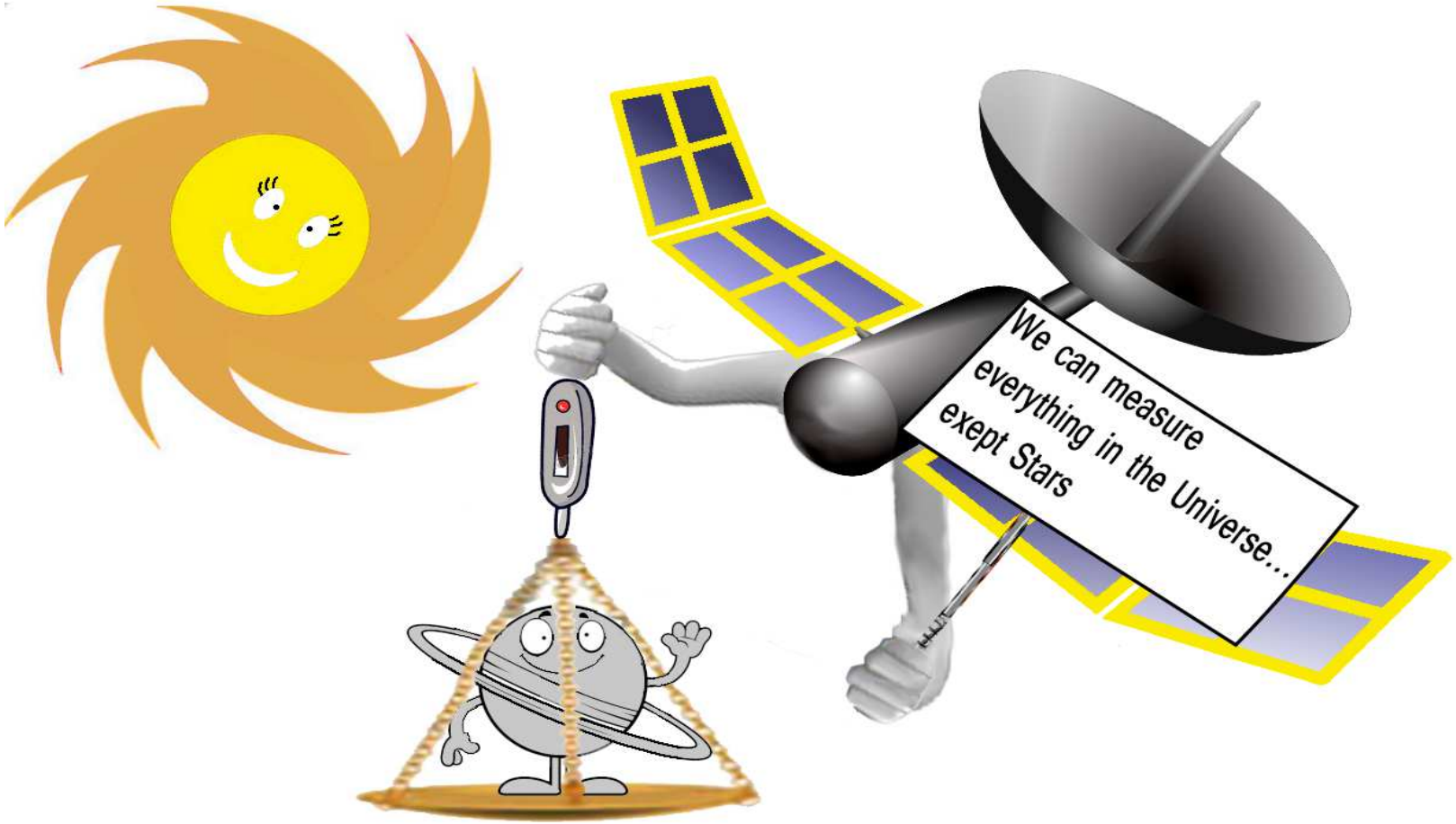
Looking for project partners who can small, highly stable frequency standard